Unit: Related Rates
Topic: Related Rates and Volume
Objective: SWBAT apply derivatives to real life applications.

Warm Up #2:

A square shrinks so that the length of each of its diagonals is decreasing at a rate of $8\ m/min$. At what rate is the area of the square changing when the diagonals are $5m$ each?

Volume Problems

Example #1:

Sand is falling off a conveyor belt at a rate of 12 cubic feet per minute into a conical pile. The diameter of the pile is four times the height. At what rate is the height of the pile changing when the pile is 10 feet high? ($V_{cone} = \frac{1}{3}\pi r^2 h$)

Example #2:

A spherical balloon is deflated at a rate of $\frac{256\pi}{3}\ cm^3/sec$. At what rate is the radius of the balloon changing when the radius is 8 cm? ($V_{sphere} = \frac{4}{3}\pi r^3$)

Problem Set #2: *Read each question carefully and show ALL work.*

1) A conical paper cup is 10 cm tall with a radius of 10 cm. The bottom of the cup is punctured so that the water level goes down at a rate of 2 cm/sec. At what rate is the volume of water in the cup changing when the water level is 9 cm? ($V_{cone} = \frac{1}{3}\pi r^2 h$)

2) A spherical snowball melts so that its radius decreases at a rate if 4 in/sec. At what rate is the volume of the snowball changing when the radius is 8 inches?

3) A perfect cube shaped ice cube melts so that the length of its sides are decreasing at a rate of 2 mm/sec. Assume the block retains its cube shape as it melts. At what rate is the volume of the ice cube changing when the sides are 2 mm each?

4) A conical paper cup is 30 cm tall with a diameter of 20 cm. The cup is being filled with water at a rate of $\frac{2\pi}{3}$ cm^3/sec. How fast is the water level rising when the water level is 2 cm?

5) A container has the shape of an open right circular cone, as shown in the figure above. The height of the container is 10 cm and the diameter of the opening is 10 cm. Water in the container is evaporating so that its depth h is changing at the constant rate of $\frac{-3}{10}$ cm/hr.

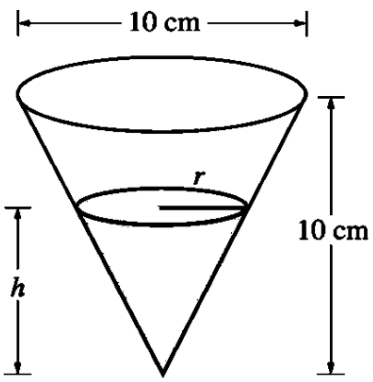

(The volume of a cone of height h and radius r is given by $V = \frac{1}{3}\pi r^2 h$.)

(a) Find the volume V of water in the container when $h = 5$ cm. Indicate units of measure.

(b) Find the rate of change of the volume of water in the container, with respect to time, when $h = 5$ cm. Indicate units of measure.

6) A cube grows so that the length of its sides are increasing at a rate of 4 m/min. How fast is the volume of the cube increasing when the sides are 7 m each?

7) A spherical balloon is inflated with helium at the rate of $100\pi\ ft^3/min$.

a) How fast is the balloon's radius increasing at the instant the radius is 5 feet?
b) How fast is the surface area increasing at that instant? ($SA_{sphere} = 4\pi r^2$)

Answer Key:

1) $-162\pi\ cm^3/sec$	2) $-1024\pi\ in^3/sec$
3) $-24\ mm^3/sec$	4) $\frac{3}{2}\ cm/sec$
5) a) $\frac{125}{12}\pi\ cm^3$ b) $-\frac{15}{8}\pi\ cm^3/hr$	6) $588\ m^3/min$
7) a) $1\ ft/min$ b) $40\pi\ ft^2/min$	